Pronto-design.com

Radial bed

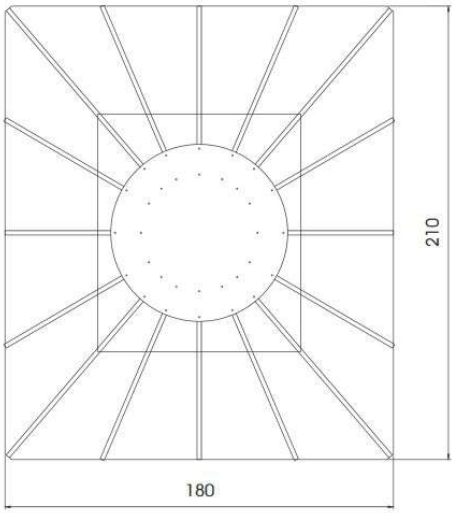

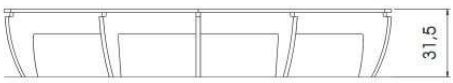

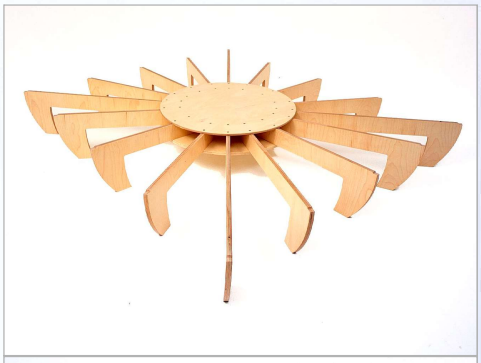

riccardo maranzana design
www.pronto-design.com